Important Installation Information

GAS Type Verification

Verify the type of gas supplied to the location. Ensure that the appliance is connected to the type of gas for which it is certified. Ranges are certified for use with only natural gas or propane (LP) gas. Make certain the range matches the gas type available; these ranges are NOT convertible between gas types.

WARNING:
To avoid possible burn or fire hazard, a backguard designed specifically for this range must be installed whenever the range is used.

Refer to the "Chart C: Backguard Kit Model Numbers" on page 14, for the correct backguard models that are designed for this range. After selecting the correct backguard, the range must be installed properly, using the minimum clearances to combustible surfaces specified in the Cabinet Preparation instructions on page 4.

Important:

- A backguard must be utilized when there is less than a 12" horizontal clearance between combustible materials and the back edge of the range. The Thermador Low Back backguard must be ordered separately and installed at the rear of the range. For island installations and other installations with more than 12" clearance, an optional stainless steel Island Trim is available to cover the backguard mounting flanges.
- Verify that the appliance is correct for the type of gas being provided. Refer to Step 5 on page 12 before proceeding with the installation.

CAUTION:
To eliminate risk of burns or fire caused by reaching over heated surface units, cabinet storage located above the surface units should be avoided.

Gas Supply:

Natural Gas — 6 inch water column. (14.9 mb) min., 14 inch (34.9 mb) maximum

Propane Gas — 11 inch water column. (27.4 mb) min., 14 inch (34.9 mb) maximum

Electric Power Supply:

30" Model:
4 Burners — 120 VAC, 60 Hz., 1Ph., 10 Amp circuit.

36" Models:
6 Burners — 120 VAC, 60 Hz., 1Ph., 10 Amp circuit
4 Burners with Griddle — 120 VAC, 60 Hz., 1Ph., 20 Amp circuit.

CAUTION:
When connecting the unit to propane gas, make certain the propane gas tank is equipped with its own high-pressure regulator in addition to the pressure regulator supplied with the range.**The maximum gas pressure to this appliance must not exceed 14.0 inches water column (34.9 mb) from the propane gas tank to the pressure regulator.**

CAUTION:
This unit is designed as a cooking appliance. Based on safety considerations, never use it for warming or heating a room.

This appliance has been tested in accordance with ANSI Z21.1, Standard for Household Cooking Appliances (USA) and in accordance with CAN 1.1-M81 Domestic Gas Ranges (Canadian). It is strongly recommended that this appliance be installed in conjunction with a suitable overhead vent hood. (See Step 1 for Ventilation Requirements.) Due to the high heat capability of this unit, particular attention should be paid to the hood and duct work installation to assure it meets local building codes.

This appliance complies with one or more of the following standards:

- UL 858, Standard for the Safety of Household Electric Ranges
- UL 923, Standard for the Safety of Microwave Cooking Appliances
- UL 507, Standard for the Safety of Electric Fans
- ANSI Z21.1, American National Standard for Household Cooking Gas Appliances
- CAN/CSA-C22.2 No. 113-M1984 Fans and Ventilators
- CAN/CSA-C22.2 No. 61-M89 Household Cooking Ranges

Check local building codes for the proper method of appliance installation. Local codes vary. Installation, electrical connections and grounding must comply with all applicable codes. In the absence of local codes the

appliance should be installed in accordance with the National Fuel Gas Code ANSI Z223.1/ NFPA 54 current issue and National Electrical Code ANSI/NFPA 70 -current issue. In Canada, installation must be in accordance with the CAN 1-B149.1 and .2 – Installation Codes for Gas Burning Appliances and/or local codes.

It is the responsibility of the owner and the installer to determine if additional requirements and/or standards apply to specific installations.

Step 1: Ventilation Requirements

It is strongly recommended that a suitable exhaust hood be installed above the range. Downdraft ventilation should not be used. The following table indicates the ventilation hood options and blower capacity guidelines that are recommended for use with all Thermador ranges.

1. Select Hood and Blower Models:

- For wall installations, the hood width must, at a minimum, equal the width of the range cooking surface. Where space permits, a hood larger in width than the cooking surface may be desirable for improved ventilation performance.
- For island installations, the hood width should, at a minimum, overhang the range cooking surface by 3" on each side.

Important:

Ventilation hoods and blowers are designed for use with single wall ducting. However, some local building codes or inspectors may require double wall ducting. Consult local building codes and/or local agencies, before starting, to assure that hood and duct installation will meet local requirements.

Do not install a microwave oven/ventilator combination above the range, as these type of units do not provide the proper ventilation and are not suitable for use with the range.

2. Hood Placement:

- For best smoke elimination, the lower edge of the hood should be installed 30" above the range cooking surface. (See Figure 1).

NOTICE:

Most range hoods contain combustible components which must be considered when planning the installation.

- If the hood contains any combustible materials (i.e. a wood covering), it must be installed a minimum of 40" above the cooking surface.

3. Consider Make-Up Air:

- Due to the high volume of ventilation air, a source of outside replacement air is recommended. This is particularly important for tightly sealed and insulated homes.
- A qualified heating and ventilating contractor should be consulted.

Range Width	Range Top Configuration	Minimum Recommended Blower Capacity*	Ventilation Options
30"	4 burners	800 CFM	30” or 36” Pro Wall Hood 30” or 36” Custom Insert w/ optional blower 42” Island Hood w/ optional blower
36"	4 burners with griddle	1,000 CFM	36” or 42” Pro Wall Hood 36” Custom Insert w/ optional blower 42” or 48” Island Hood w/ optional blower
	6 burners	1,100 CFM	

Range Width	Range Top Configuration	Minimum Recommended Blower Capacity*	Ventilation Options

Important Notes:

It is recommended that a Thermador Professional wall or island hood or custom insert is used with Thermador Professional Ranges.

The HPWB Professional Series Wall Hoods or the Professional Series Custom Inserts are recommended ventilation solutions for these ranges. The PH Professional Series Wall Hoods are also a viable option, however the 27” depth of the PH series may not be suitable to all applications.

Refer to ***www.Thermador.com*** for a complete selection of Professional Ventilation options, Blowers, and Accessories.

* For high output gas ranges (60,000 BTU or greater), the minimum of one (1) CFM of ventilation per 100 BTU is recommended. If the range has a griddle, add 200 CFM to the estimated blower capacity. Additional blower capacity may be required for longer duct runs.

For island applications, it is recommended to use a hood width that exceeds the width of the range by 6” (overlapping the range by a minimum of 3” on each end).

CFM = “cubic feet per minute” (standard blower capacity rating).

Step 2: Cabinet Preparation

1. The range is a free standing unit. If the unit is to be placed adjacent to cabinets, the clearances shown in Figure 1 are required. The same clearances apply to island installations, except for the overhead cabinets, which must have a space wide enough to accept the flared island hood, as indicated in Figure 1.
2. These ranges may be recessed into the cabinets beyond the edge of the front face of the oven (See Figure 2).

CAUTION:
In these installations, the door and cabinet can cause a pinching hazard.

3. The gas and electrical supply should be within the zone shown in Figure 3a.

Note:
The maximum depth of over head cabinets installed on either side of the hood is 13".

A 40-inch minimum clearance is required between the top of the cooking surface and the bottom of an unprotected cabinet. A 30-inch clearance can be used when the bottom of the wood or metal cabinet is protected by not less than 1/4 inch of a flame retardant material covered with not less than No. 28 MSG sheet steel, 0.015 inch (0.4 mm) thick stainless steel, 0.024 inch (0.6 mm) aluminum, or 0.020 inch (0.5 mm) thick copper. Flame retardant materials bear the mark:

UNDERWRITERS LABORATORIES INC. CLASSIFIED MINERAL AND FIBER BOARDS SURFACE BURNING CHARACTERISTICS

Followed by the flame spread and smoke ratings. These designations are shown as “FHC (FIame Spread/Smoke Developed)”. Materials with “O” flame spread ratings are flame retardant. Local codes may allow other flame spread ratings.

4. Any openings in the wall behind the range and in the floor under the range must be sealed.
5. When there is less than a 12" horizontal clearance between combustible material Δ and the back edge of the range above the cooking surface, a Thermador Low Back or Pot and Pan Shelf must be installed. (See Figure 2). When clearance to combustible material Δ is over 12", a Thermador Flush Island Trim may be used. Figure 2 indicates the space required for each type of backguard.
6. Always keep appliance area clear and free from combustible materials, gasoline and other flammable vapors and liquids.
7. Do not obstruct the flow of combustion and ventilation air to the unit.
8. A (10) inch minimum clearance is needed when the range is installed beside a combustible side wall.

Δ As defined in the “National Fuel Gas Code” (ANSI Z223.1, NFPA 54 Current Edition).

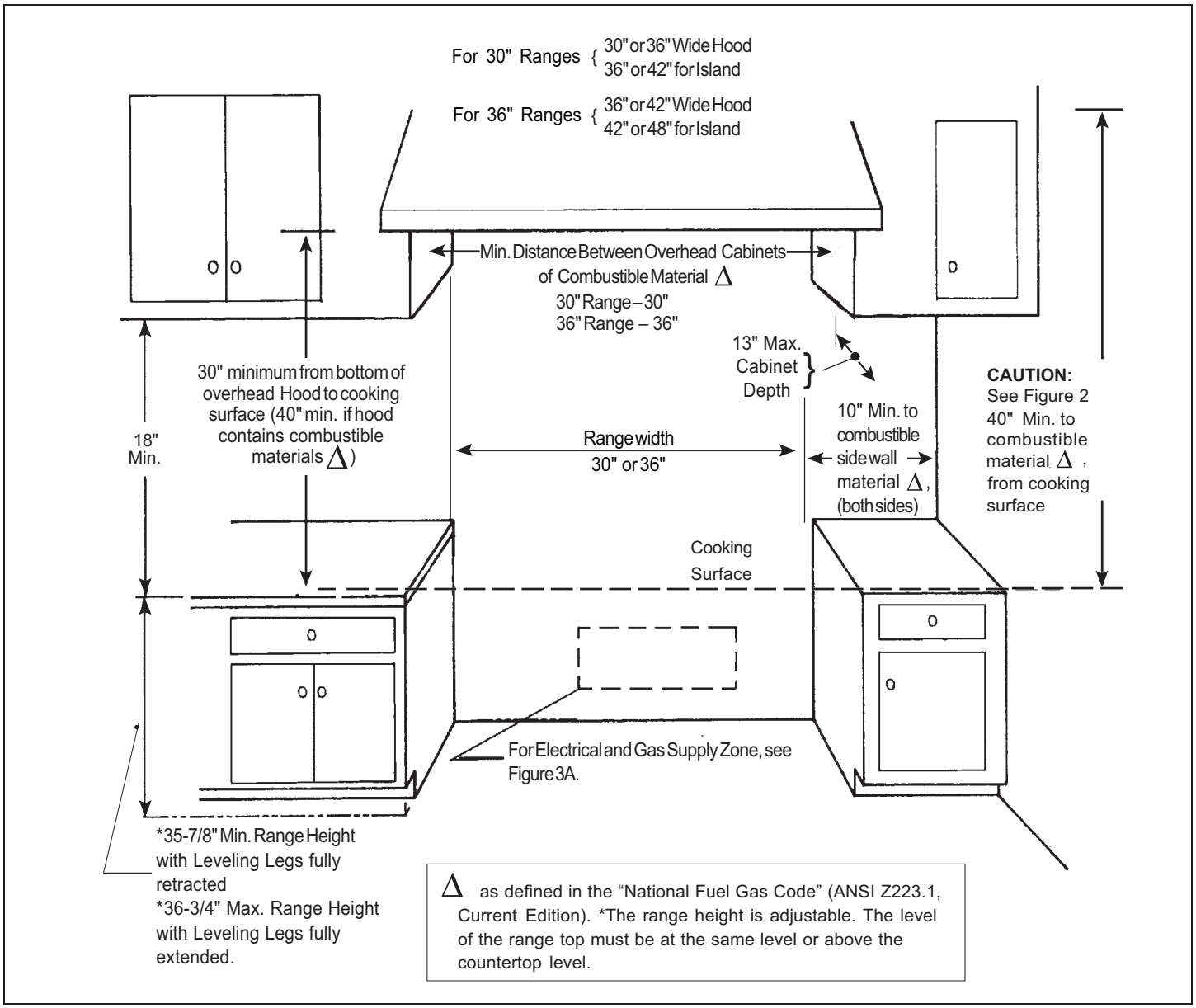

Figure 1: Cabinet Clearances

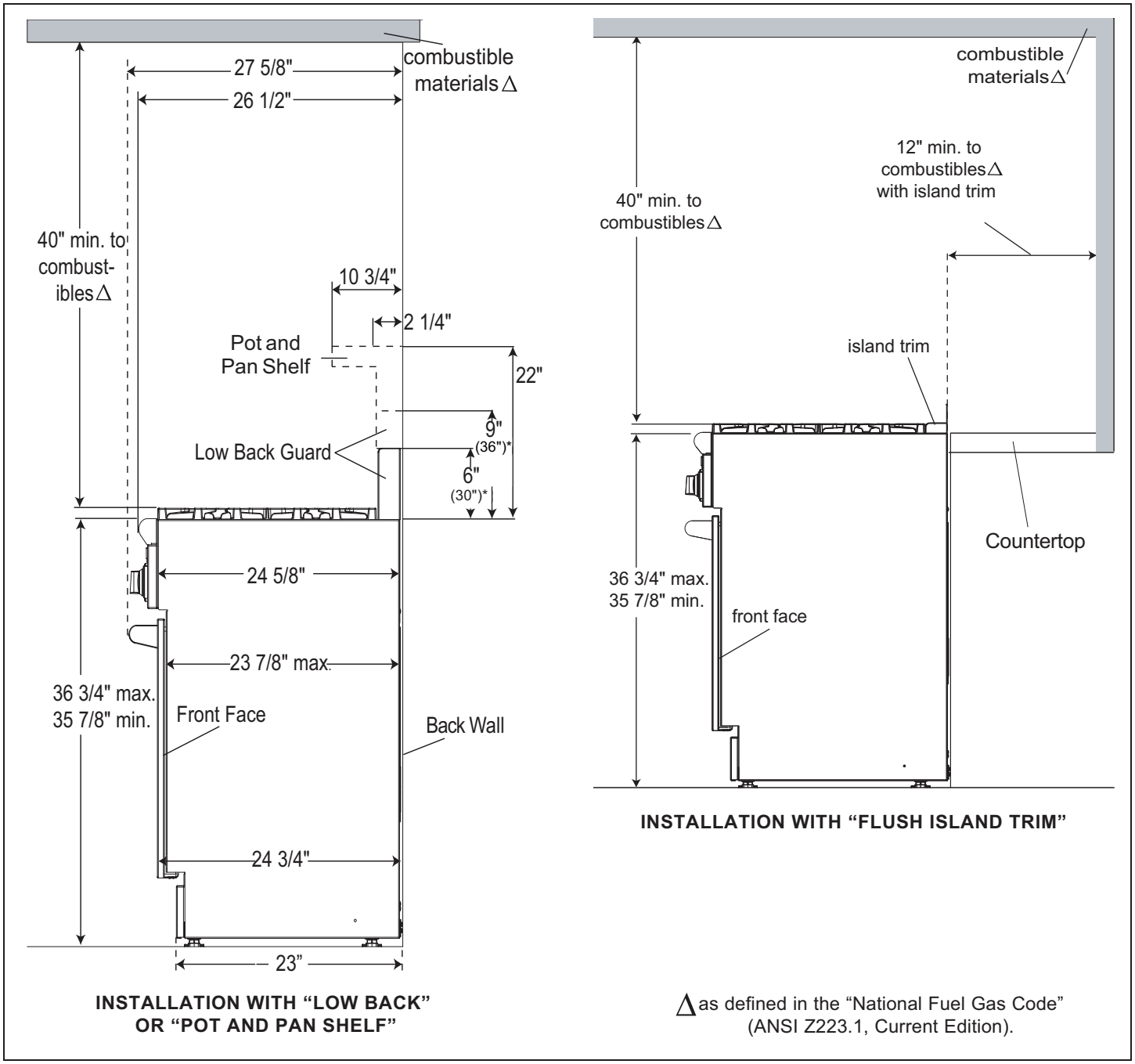

Figure 2: Side View

* Refers to 30" and 36" range models.

Note:
With the oven door fully open, the top of the door extends to 44-7/8" from the back wall, behind the range when installed. Installation must allow ample clearance for movement around the door when fully open.

Gas and Electric Supply

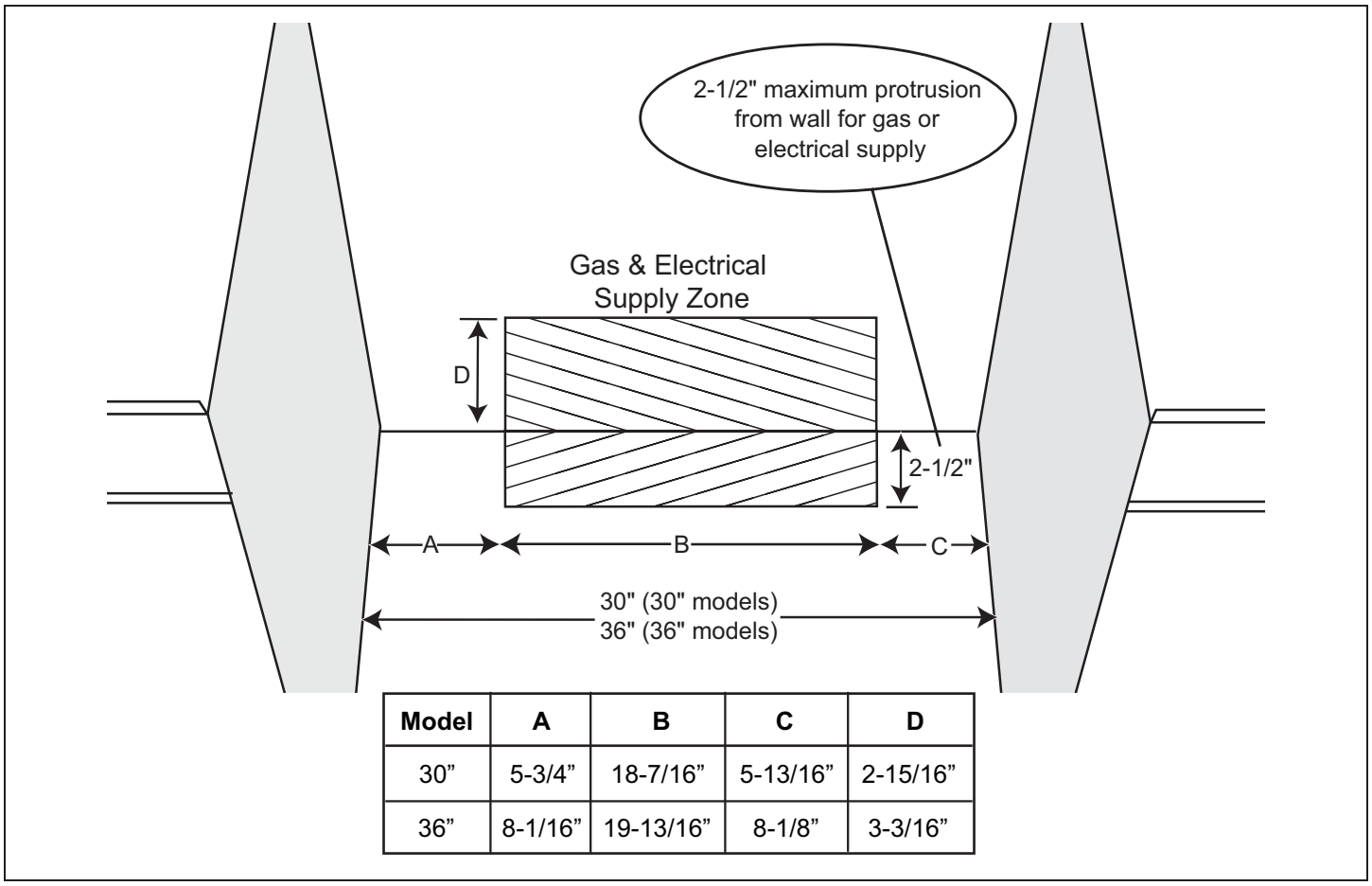

Model	A	B	C	D
30”	5-3/4”	18-7/16”	5-13/16”	2-15/16”
36”	8-1/16”	19-13/16”	8-1/8”	3-3/16”

Figure 3a: Gas & Electrical Supply Locations for All Gas Ranges

Note:
If not already present, install gas shut-off valve in an easily accessible location. Make sure all users know where and how to shut off the gas supply to the range.

Note:
The installer should inform the consumer of the location of the gas shut-off valve.

Note:
Any opening in the wall behind the appliance and any opening in the floor under the appliance must be sealed.

The gas ranges may be connected to the power supply with a range supply cord kit or by hard-wiring to the power supply. It is the responsibility of the installer to provide the proper wiring components (cord or conduit and wires) and complete the gas connection as dictated by local codes and ordinances, and/or the National Electric Code. The units must be properly grounded. Refer to Step 6 for details.

The range must be connected only to the type of gas for which it is certified. If the range is to be connected to propane gas, ensure that the propane gas supply tank is equipped with its own high pressure regulator in addition to the pressure regulator supplied with the range. (See Step 5.)

Note:
The range is designed for flush installation to the back wall. For a successful installation, it may be necessary to reposition the gas-supply line and electrical cord as the range is pushed back to its final position.
SUGGESTION: This may be accomplished by carefully pulling on a rope or twine looped around the gas or electrical supply line as the range is pushed back into its final installed position.

Step 5: Gas Requirements and Hookup

Verify the type of gas being used at the installation site. **As shipped from the factory, units are configured for use with only natural gas or propane (LP) gas. Make certain the range matches the type of gas available at this location. These ranges are NOT convertible between different types of gas.**

For installation of the appliance at high altitude, please consult your local gas company for their recommendation of the correct orifice sizes and any other necessary adjustments that will provide proper gas combustion at specified altitudes.

CAUTION
When connecting unit to propane gas, make certain the propane gas tank is equipped with its own high pressure regulator in addition to the pressure regulator supplied with the appliance. The pressure of the gas supplied to the appliance regulator must not exceed 14" (34.9 mb) water column.

Natural Gas Requirements:

Inlet Connection:	1/2" NPT internal (Minimum 3/4" dia. flex line.)
Supply Pressure:	6" min. to 14" max. water column. (14.9 to 34.9 mb)
Manifold Pressure:	5" water column (12.5 mb)

Propane Gas Requirements:

Inlet Connection:	1/2" NPT internal (Minimum 3/4" dia. flex line.)
Supply Pressure:	11" min. to 14"max. water column. (27.4 mb to 34.9 mb)
Manifold Pressure:	10" water column (24.9 mb)

WARNING
Gas line must not come in contact with any components inside back cover of range.

Hook Up

- A manual gas shut-off valve must be installed external to the appliance, in a location accessible from the front, for the purpose of shutting off the gas supply. The supply line must not interfere with the back of the unit. Make sure the gas supply is turned off at the manual shut-off valve before connecting the appliance.
- The range is supplied with its own pressure regulator that has been permanently mounted within the range body.
- Use 3/4" flex line to connect between the gas supply and the appliance gas inlet, located at the lower right portion of the range. (See Figure 8.) The appliance inlet pipe connection is 1/2" NPT. Use caution to avoid crimping the 3/4" flex line when making bends. Suggested length of flex line is 48", however, please check local codes for your area's requirements before installation.
- The gas supply connections shall be made by a competent technician and in accordance with local codes or ordinances. In the absence of local codes, the installation must conform to the National Fuel Gas Code ANSI Z223.1/NFPA54- current issue.
- Always use pipe sealing compound or Teflon® tape on the pipe threads, and be careful not to apply excessive pressure when tightening the fittings.
- Leak testing of the appliance shall be in accordance with the following instructions.
  - Turn on gas and check supply line connections for leaks using a soap and water solution.
  - Bubbles forming indicate a gas leak. Repair all leaks immediately after finding them.

WARNING
Do not use a flame of any kind to check for gas leaks.

CAUTION:
The appliance must be isolated from the gas supply piping system by closing its individual manual shut-off valve during any pressure testing of the gas supply piping system at test pressures equal to or less than 1/2 psig (3.5kPa.).

The appliance and its individual shut off valve must be disconnected from the gas supply piping system during any pressure testing of the system at test pressures in excess of 1/2 psig (3.5kPa.).

When checking the manifold gas pressure, the inlet pressure to the regulator should be at least 6.0" (14.9 mb) W.C. for natural gas or 11.0" (27.4 mb) for propane.

Do not attempt any adjustment of the pressure regulator.

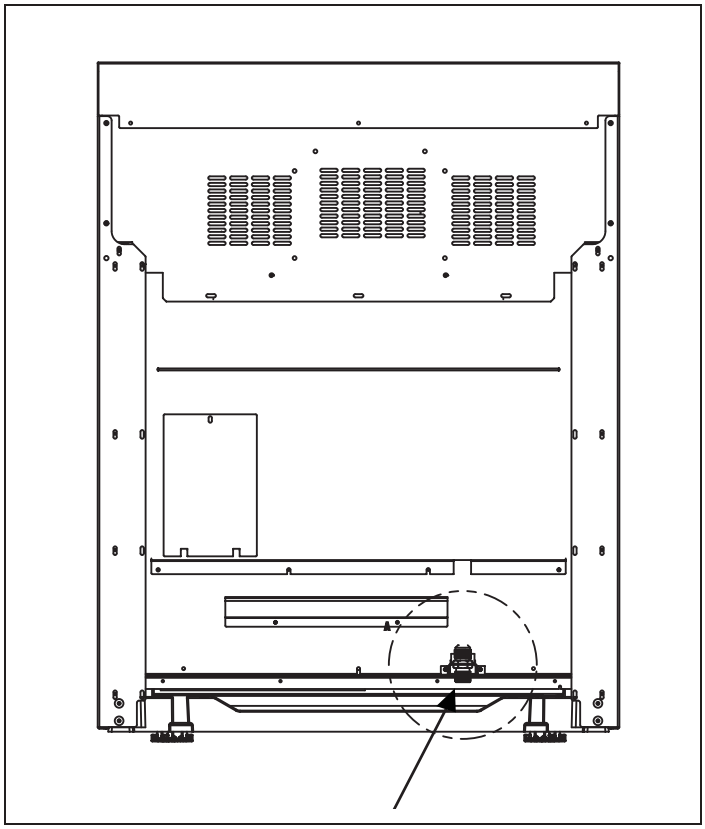

Figure 8: Location of Gas Supply Inlet Connection

Step 6: Electrical Requirements, Connection & Grounding

- Before installing, turn power **OFF** at the service panel. Lock service panel to prevent power from being turned ON accidentally.

Chart B: Electrical Supply Circuit Requirements				
MODEL TYPE	VOLTAGE	CIRCUIT RATING	FREQUENCY	PHASE
30"	120 VAC	10 Amps	60 Hz.	Single
36"	120 VAC	10 Amps	60 Hz.	Single
36” with griddle	120 VAC	20 Amps	60 Hz.	Single

- For these gas range models, a neutral supply wire must be provided from the power source (breaker/fuse panel) because critical range components, including the surface burner spark reignition modules, require 120 VAC to operate safely and properly. An improper 120 VAC power supply will cause malfunction, damage to this appliance, and possibly create a condition of shock hazard. If the correct power supply circuit is not provided, it is the responsibility and obligation of the installer and user to have proper power supply connected. This must be accomplished in accordance with all applicable local codes and ordinances by a qualified electrician. In the absence of local codes and ordinances, the power supply connection shall be in accordance with the National Electrical Code.
- Observe all governing codes and ordinances when grounding. In the absence of these codes or ordinances observe National Electrical Code ANSI/ NFPA No. 70 current issue.
- Electric wiring diagrams and schematics have been placed in the toe kick area of the range for access by a qualified service technician.
- Before you plug in an electrical cord, be sure all controls are in the **OFF** position.
- For appliances equipped with a cord and plug, do not cut or remove the ground prong. It must be plugged into a matching grounding type receptacle to avoid electrical shock. If there is any doubt as to whether the wall receptacle is properly grounded, the customer should have it checked by a qualified electrician.